MODEL MD

Project:
Tag:
Engineer:
Contractor:
Date:

MARINE OFF SHORE DAMPER

Rectangular

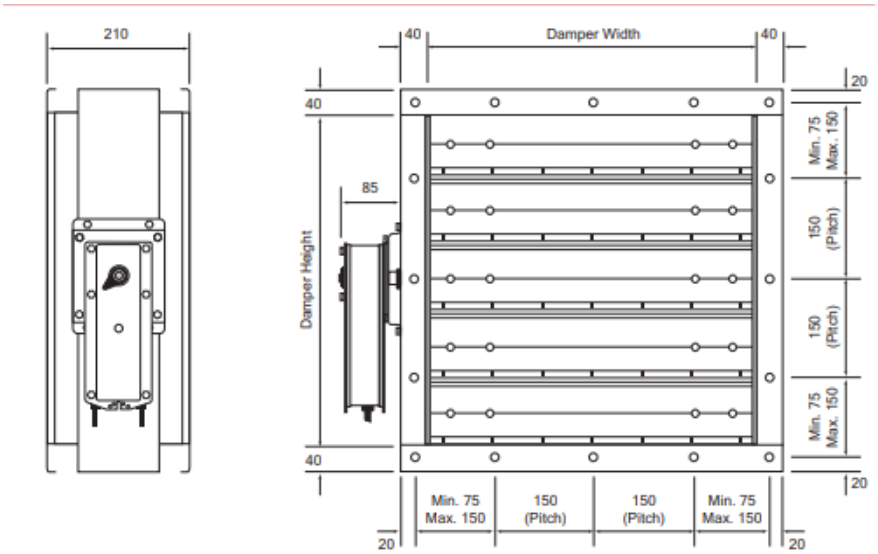

Circular

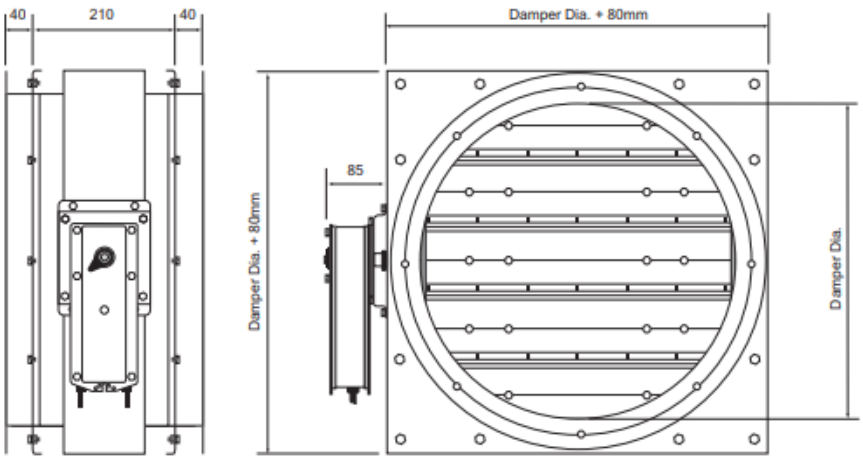

As part of our continuous improvement program, we reserve the right to make further improvements without notice.

				Date submitted: