MODEL DUK

Project:
Tag:
Engineer:
Contractor:
Date:

Jet Nozzle Diffuser Type DUK

MODEL	D3	D4	E	K	L_2
100	146	98	11	134	78
125	140	123	11	157	86
160	200	158	11	188	98
200	257	198	16	242	117
250	302	248	16	287	155
315	384	248	23	358	183
400	467	398	24	441	208

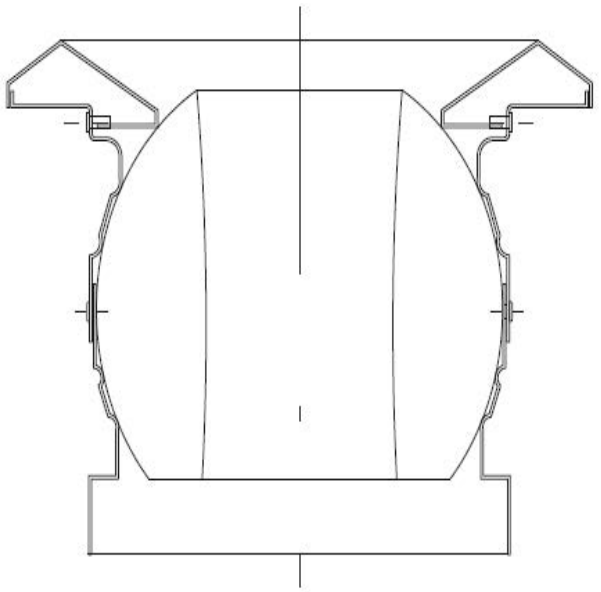

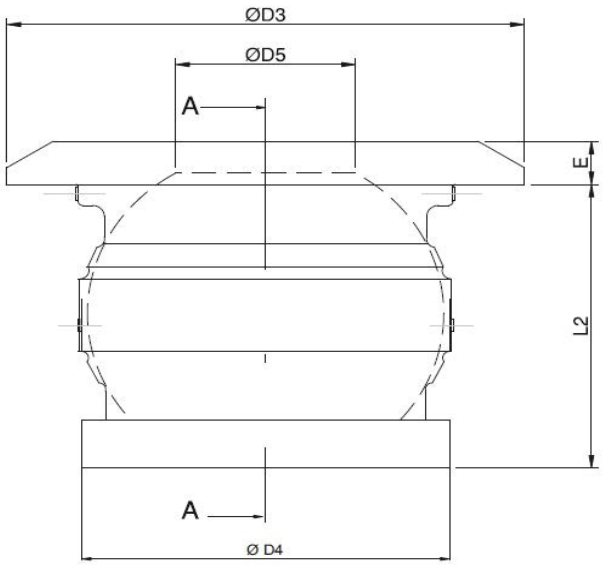

AVAILABLE FINISHES

STANDART FINISH:

☐ 01 WHITE (RAL 9016)

OPTIONAL FINISH (NO EXTRA CHARGE):

☐ 06 MILL FINISH ☐ 02 WHITE (RAL 9010)

OPTIONAL FINISH (ADDITIONAL CHARGE):

☐ 03 SATIN SILVER ☐ 07 CUSTOM COLOR/ SETUP CHARGE

☐ 04 ANODIZED ☐ 08 RAL...../ SETUP CHARGE

☐ 05 BLACK

As part of our continuous improvement program, we reserve the right to make further improvements without notice.

				Date submitted: